Push Switches
Small Horizontal Push Switches- Ⅱ

■ Features

1. The PWB occupancy area is industry's smallest at 13.8mm^2.
2. An operating life of 200,000 cycles is materialized.
3. Two types are available with- or without-a-boss.

■ Specification

1. Rating	: 20mA, 12V DC
2. Contact Resistance	: 100mΩ max.
3. Insulation Resistance	: 100MΩ min.
4. Withstanding Voltage	: 250V AC (for one minute)
5. Circuit	: SPST
6. Operating Force	: 1.8±0.5N
7. Travel	: 0.15±0.1mm
8. Operating Life	: 200,000 cycles
9. Boss	: With (JPM1990-4112F) Without (JPM1990-5211F)
10. Operating Temperature Range	: –30°C to +85°C

■ Application

Mobile phones, smart phones, digital still cameras, car audios, portable audios, PCs, PC peripherals, TVs, DVD players, industrial equipment, business equipment, home appliance and healthcare products.

JPM1990-4112F

2,000 pcs/reel

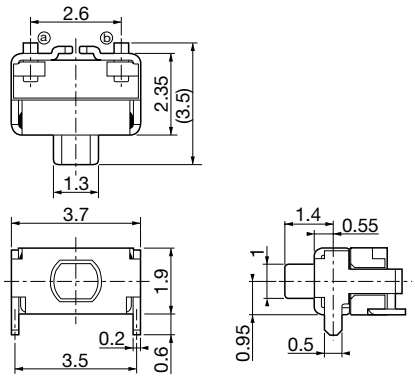

Circuit : SPST

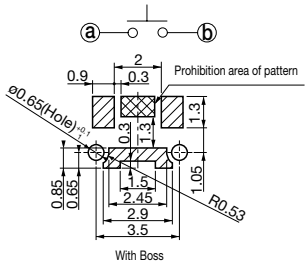

P. C. Board Dimension

JPM1990-5211F

2,000 pcs/reel

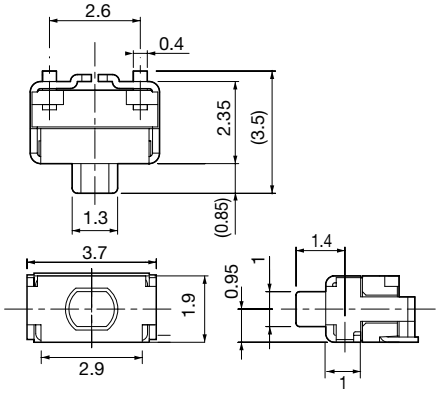

Circuit : SPST

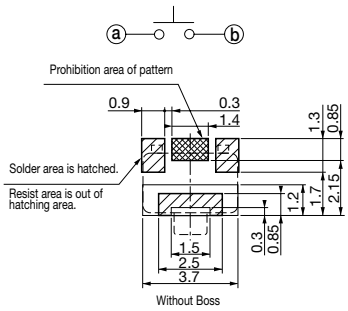

P. C. Board Dimension